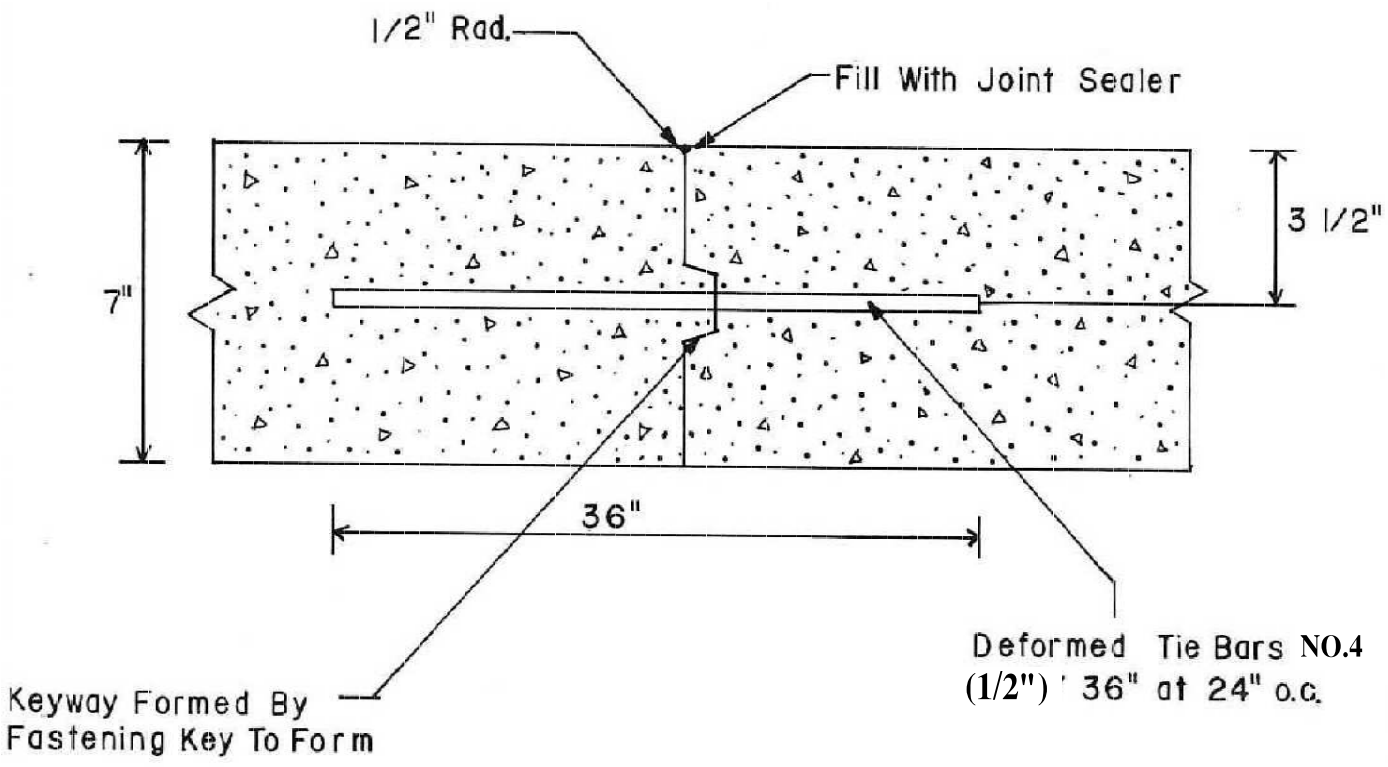

TYPICAL SECTION TIED TRANSVERSE CONSTRUCTION JOINT FOR CONCRETE PAVEMENT

FRANKLIN
ENGINEEERING DEPT.

FIGURE 5