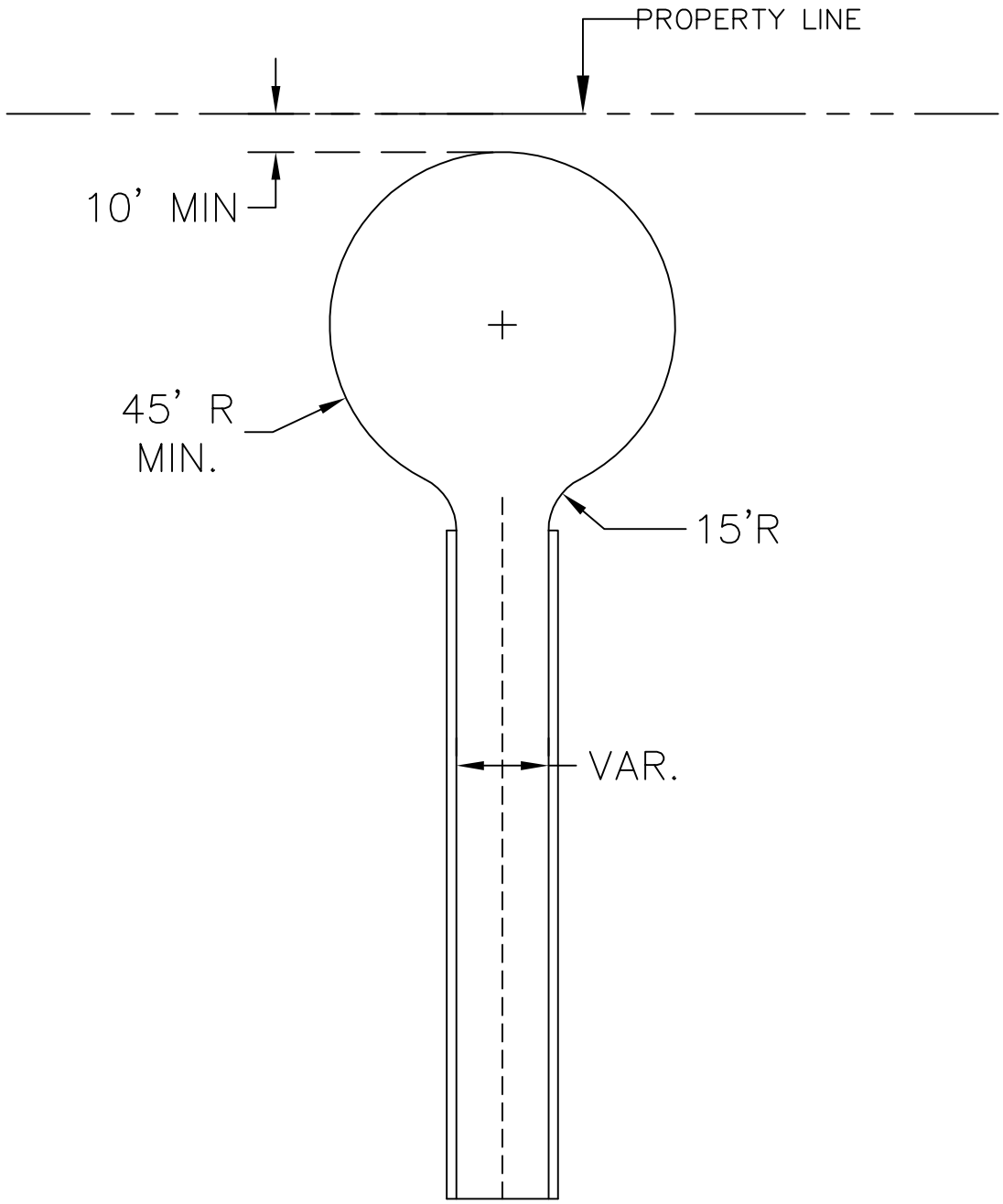

TEMPORARY TURNAROUND CUL-DE-SAC

FRANKLIN
ENGINEERING DEPT.

RMA
2017

FIGURE 37