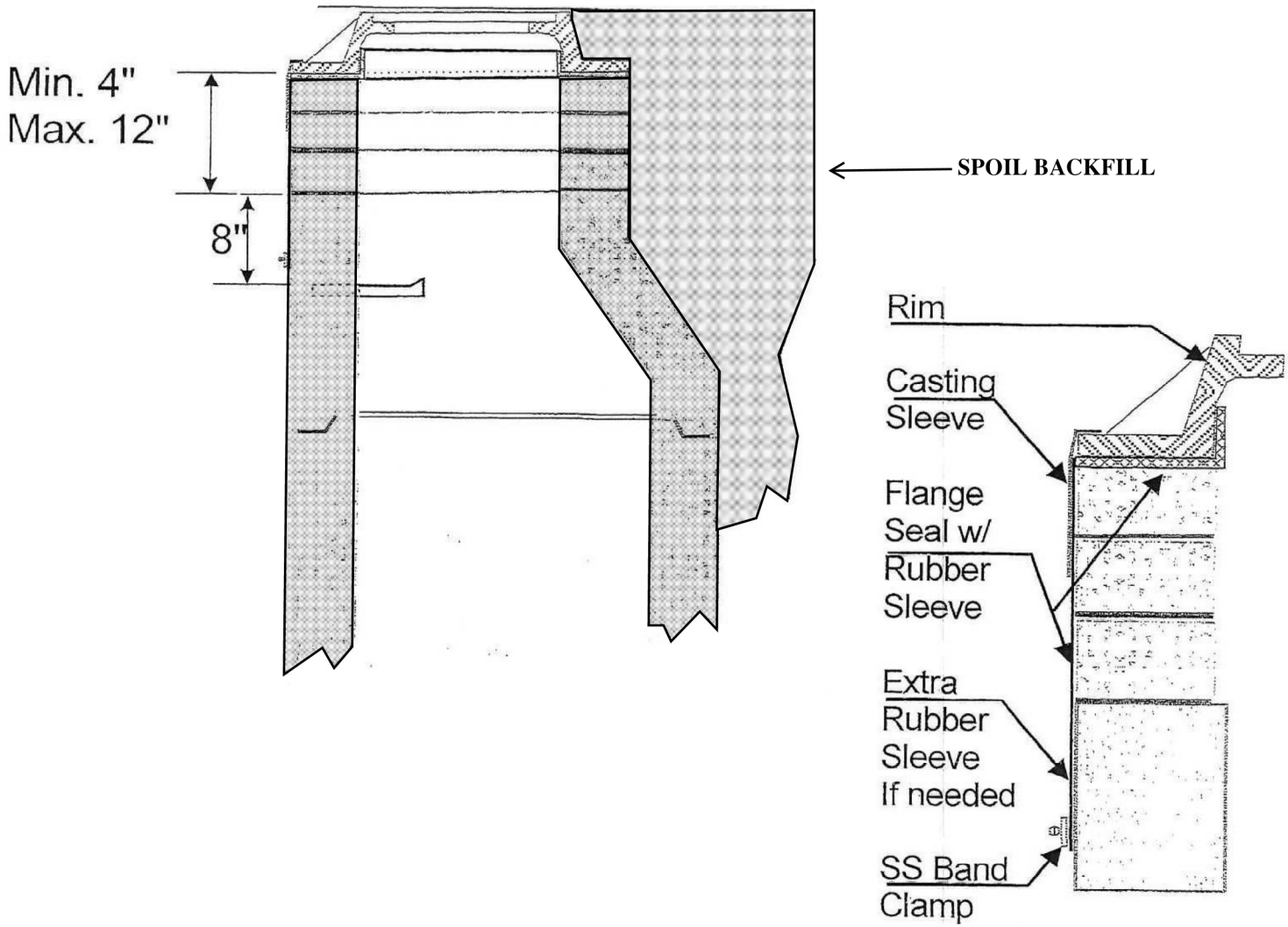

TYPICAL OFF-ROAD SANITARY SEWER MANHOLE EXTERNAL SEAL

FRANKLIN ENGINEEERING DEPT.

FIGURE 28-B