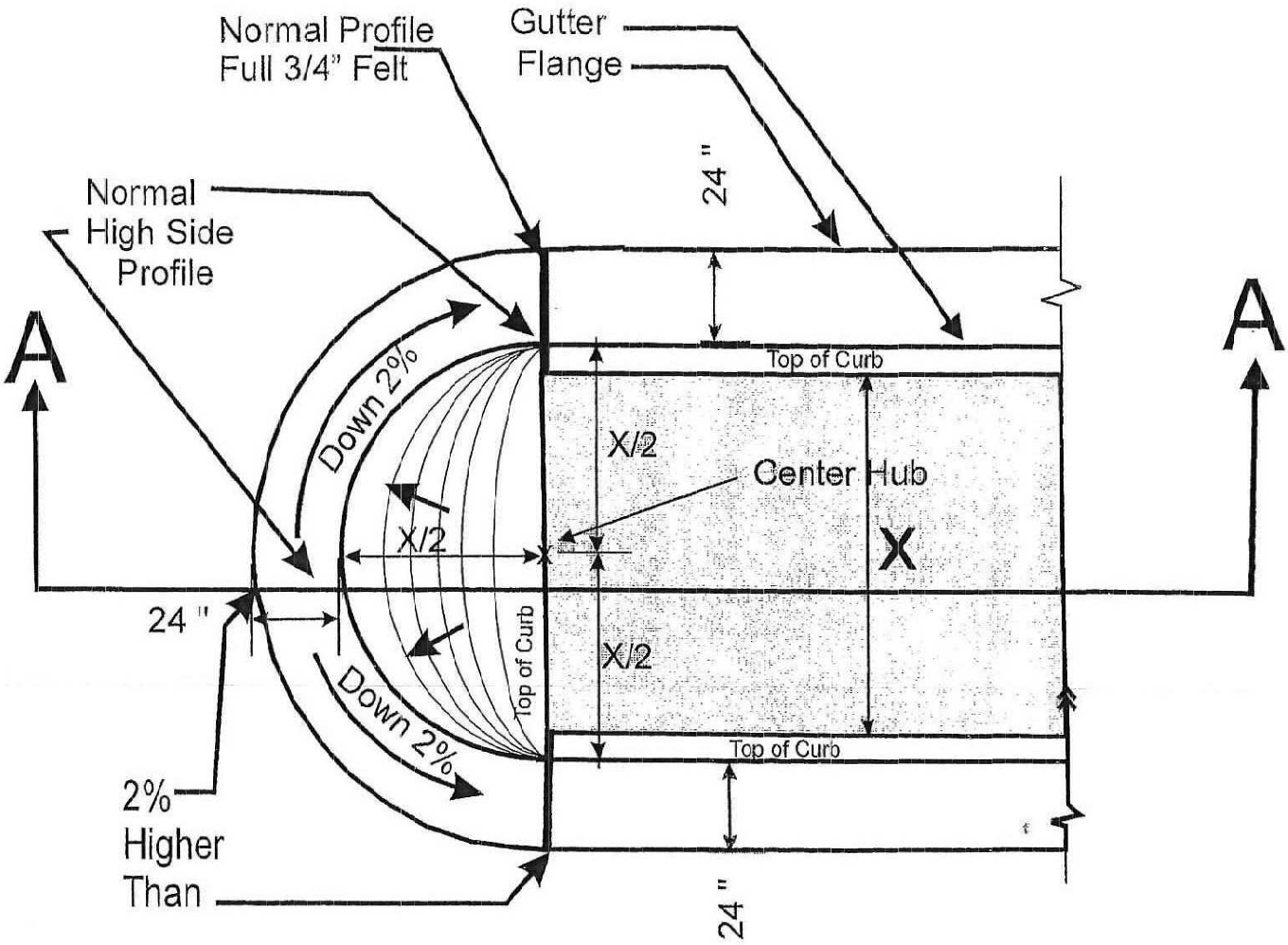

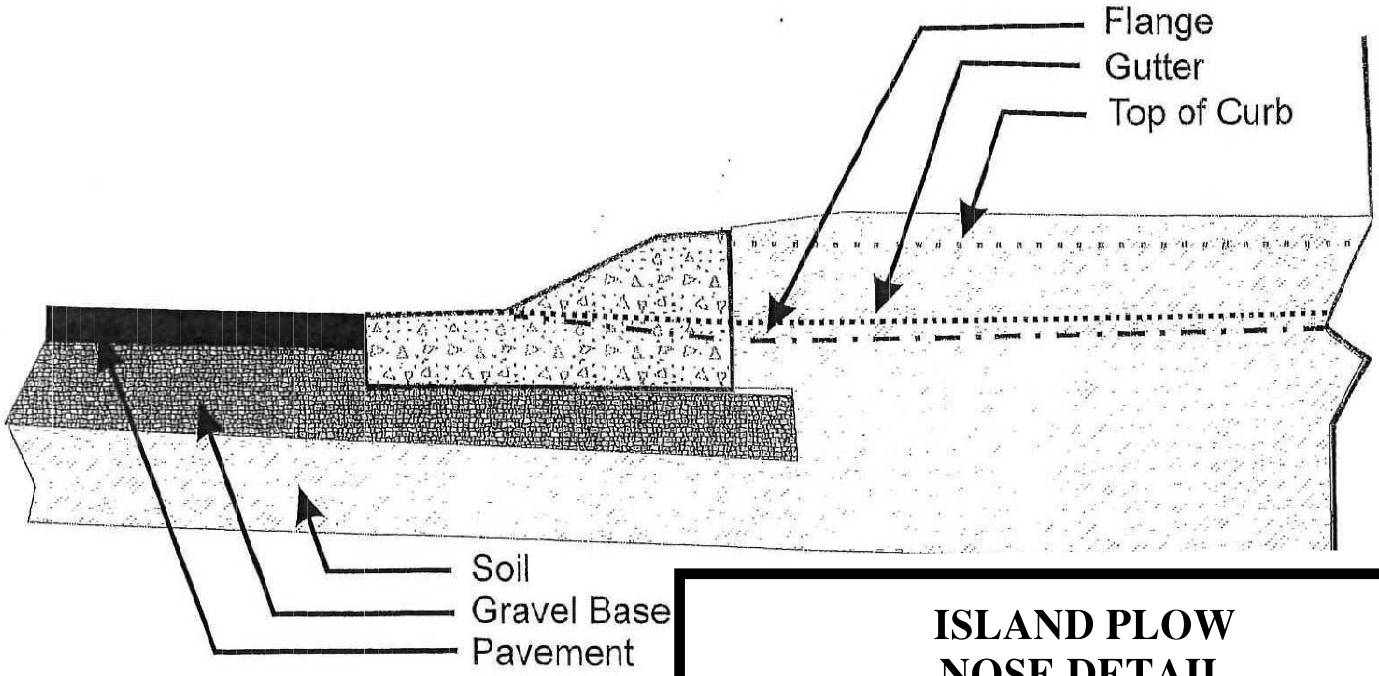

SECTION A-A

ISLAND PLOW NOSE DETAIL

FRANKLIN ENGINEEERING DEPT.

FIGURE 25