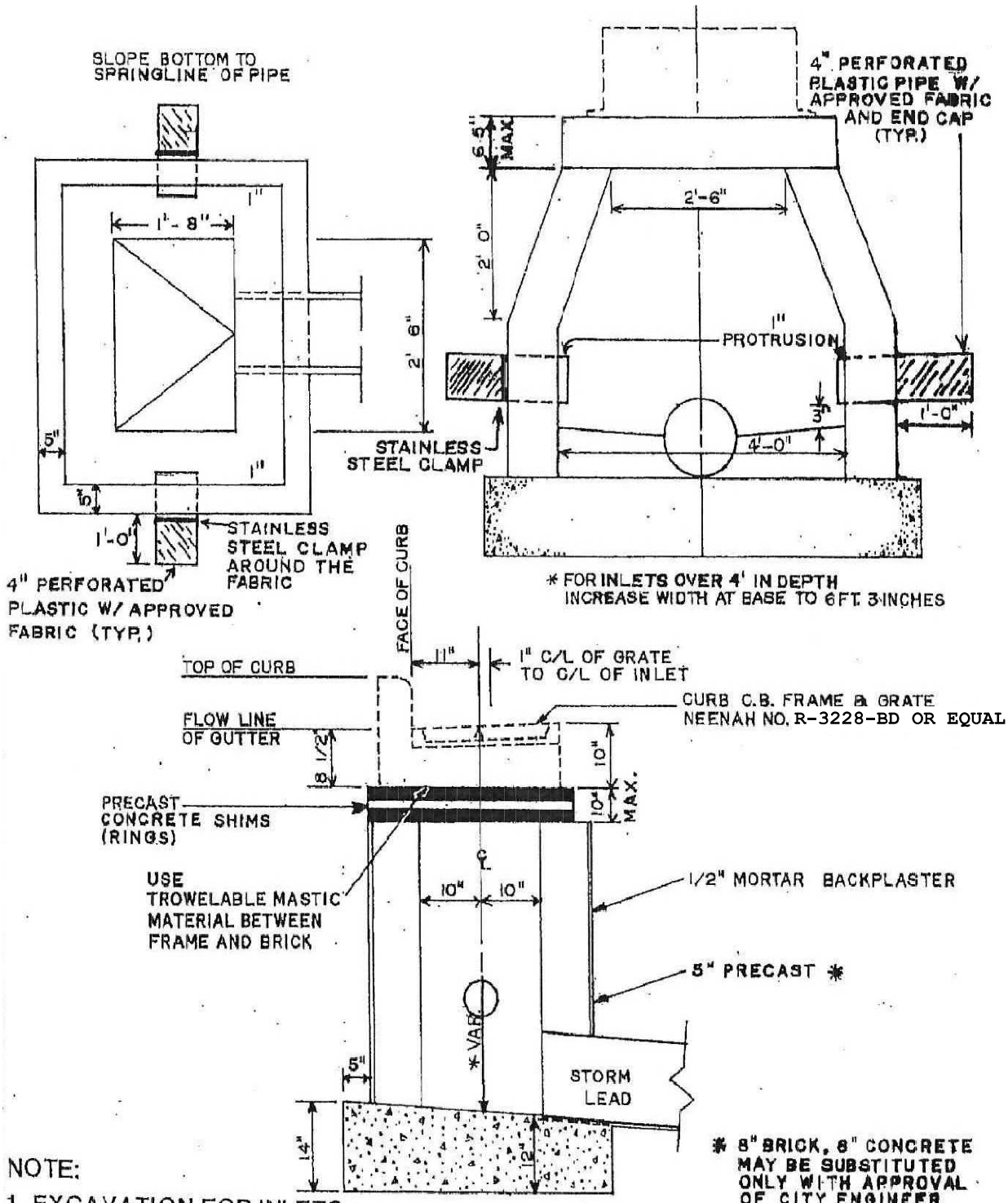

NOTE:

1. EXCAVATION FOR INLETS SHALL EXTEND AT LEAST 18 INCHES BEYOND EXTERIOR OF STRUCTURE ON THREE STREET SIDES.

2. DRAIN OPENING SHALL BE MANUFACTURED OR FIELD CORED

STORM SEWER INLET DETAIL

FRANKLIN
ENGINEEERING DEPT.

FIGURE 16