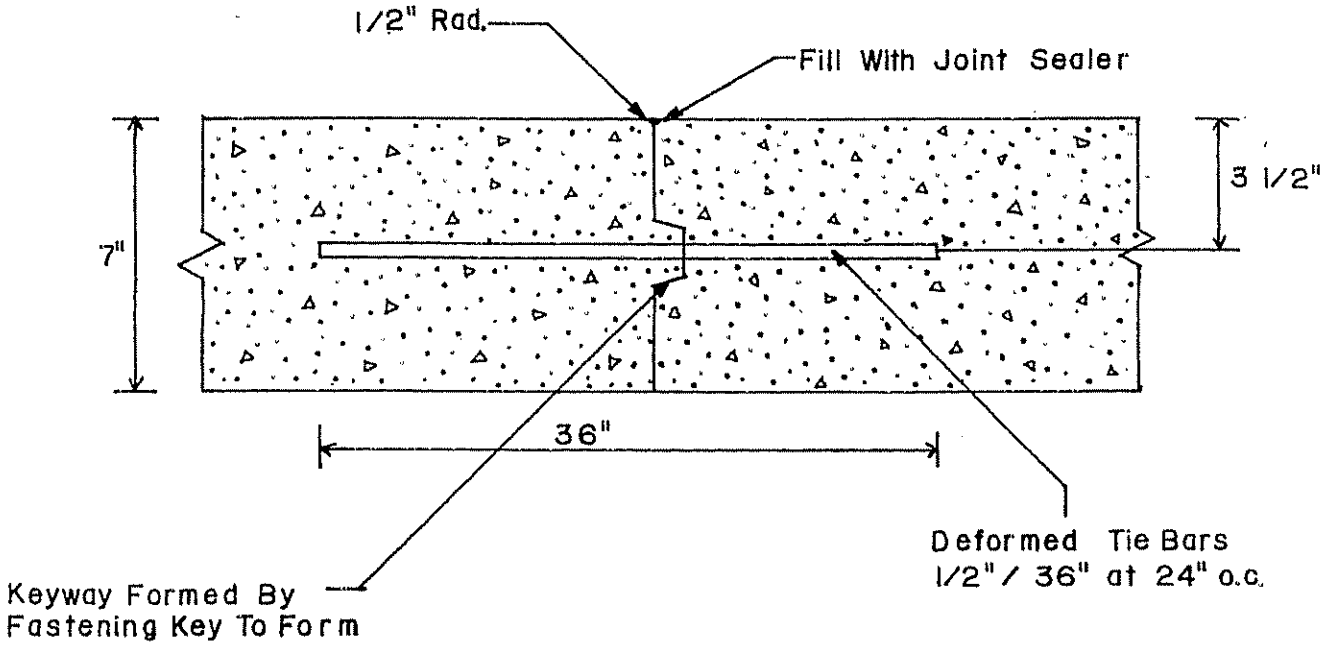

TYPICAL SECTION
TIED TRANSVERSE
CONSTRUCTION JOINT FOR
CONCRETE PAVEMENT

DRAWN BY TKG

FRANKLIN
ENGINEERING DEPT.

APPROVED BY ____

NOT TO SCALE

Figure No. 5